REPLACING PAGE ADDENDUM
Filing Instructions:

1. REMOVE FROM THE SECTION THE PAGES NUMBERED THE SAME AS THOSE ATTACHED TO THIS PINK SHEET.
2. INSERT THE ATTACHED PAGES INTO THE SECTION IN THEIR PLACE.
3. PLACE THIS PINK SHEET AHEAD OF PAGE 1 OF THE SECTION.

KS-19602 L1 AMPLIFIER

TESTS

1. GENERAL

1.001 This addendum supplements Section 024-178-500, Issue 1. The attached page must be inserted in the Section in accordance with the filing instructions above.

Attached:
Page 5, February 1969, revised

1.002 This addendum is issued to revise the KS-19602 L1 Amplifier, Schematic Diagram.

The following change applies to Part 1 of the Section:

(a) Fig. 6—Revised

© American Telephone and Telegraph Company, 1965, 1969
Printed in U.S.A.

NOTES:

1. UNLESS OTHERWISE SPECIFIED RESISTANCE VALUES ARE IN OHMS AND CAPACITANCE VALUES ARE IN MICROFARADS.
2. VOLTAGE VALUES ARE MEASURED BETWEEN THE POINTS SHOWN AND TERMINAL 6 (INPUT) USING A VOLTMETER HAVING A MINIMUM OF 10 MEGOHMS RESISTANCE.
3. VOLTAGE VALUES REPRESENT TYPICAL VALUES WITH NO SIGNAL INPUT AND NOMINAL LINE VOLTAGE.
4. ALL RESISTORS ARE 1/2 WATT WITH ±10% TOLERANCE UNLESS OTHERWISE SPECIFIED.

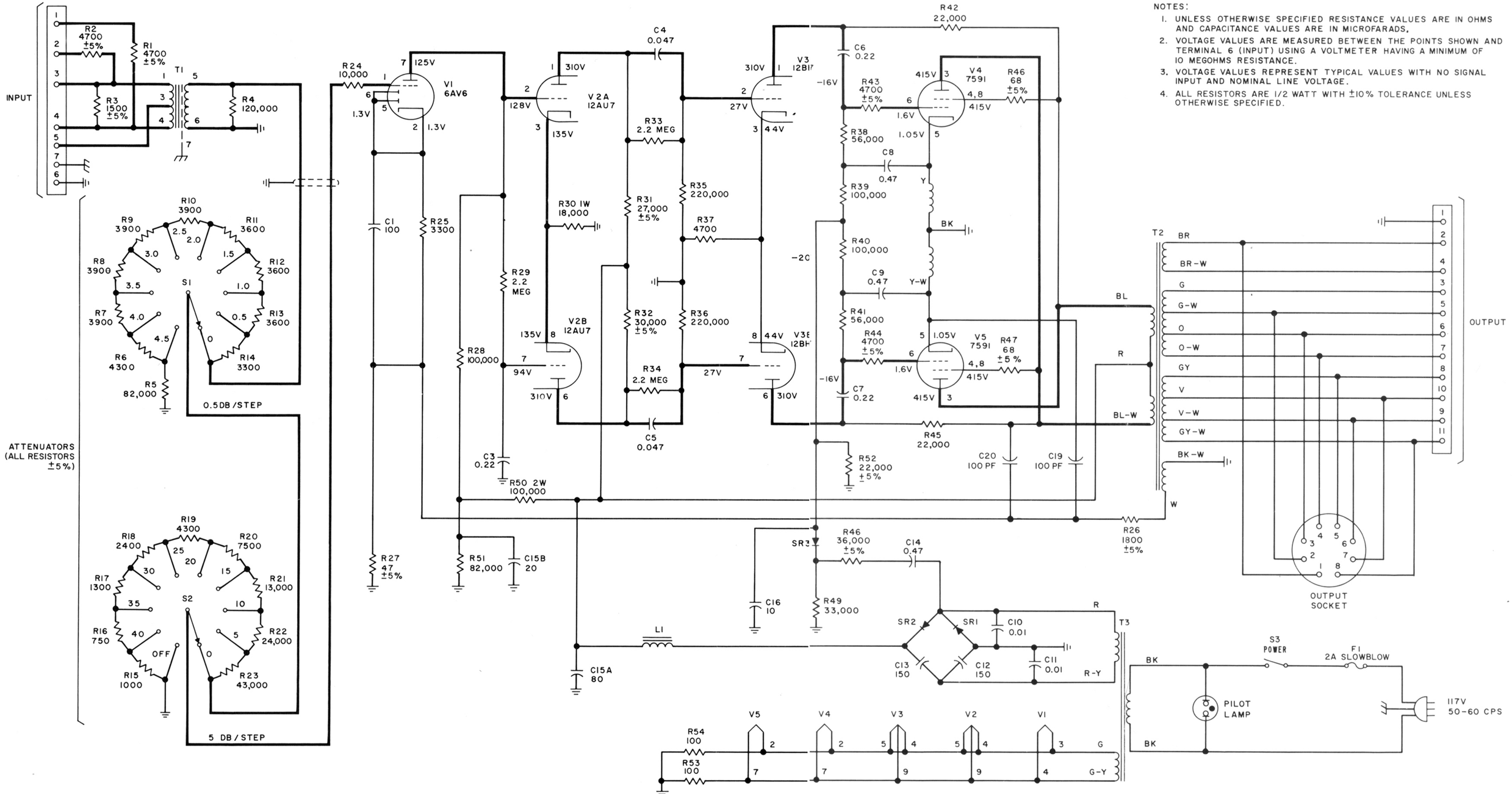

Fig. 6—KS-19602 L1 Amplifier, Schematic Diagram